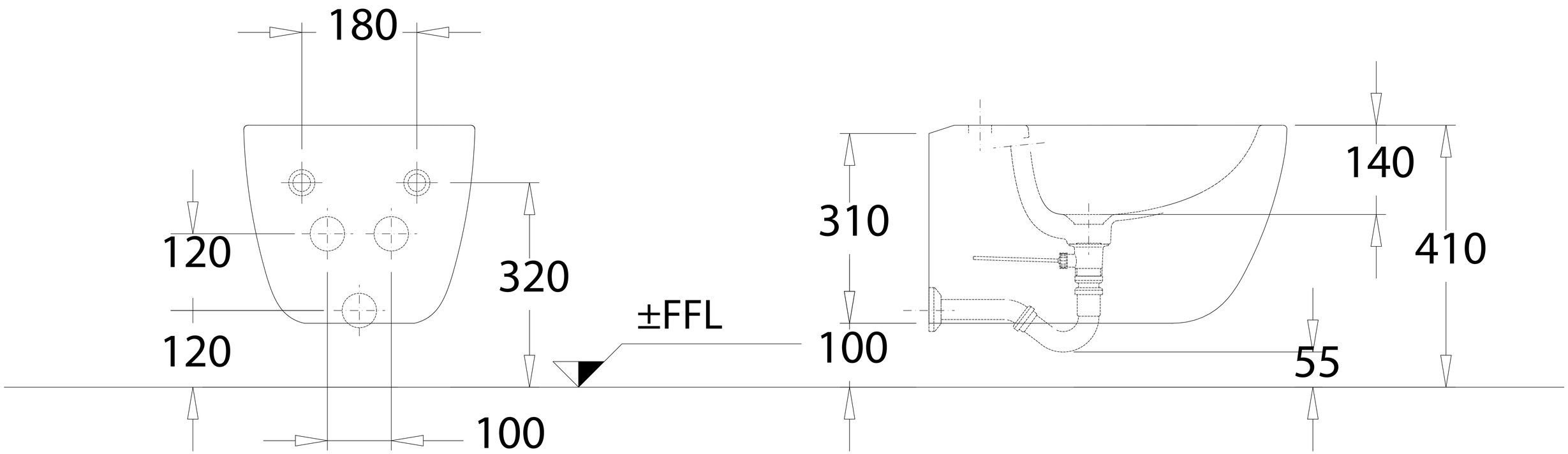

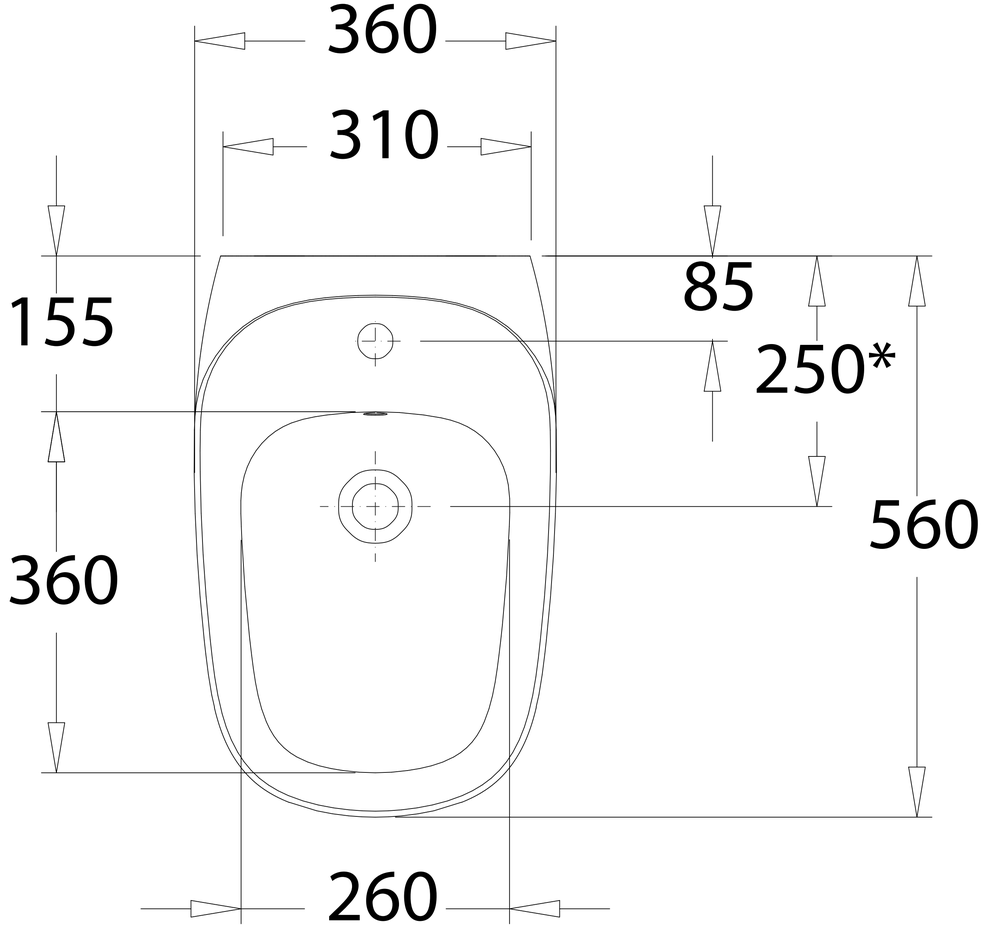

Model 23 35 50